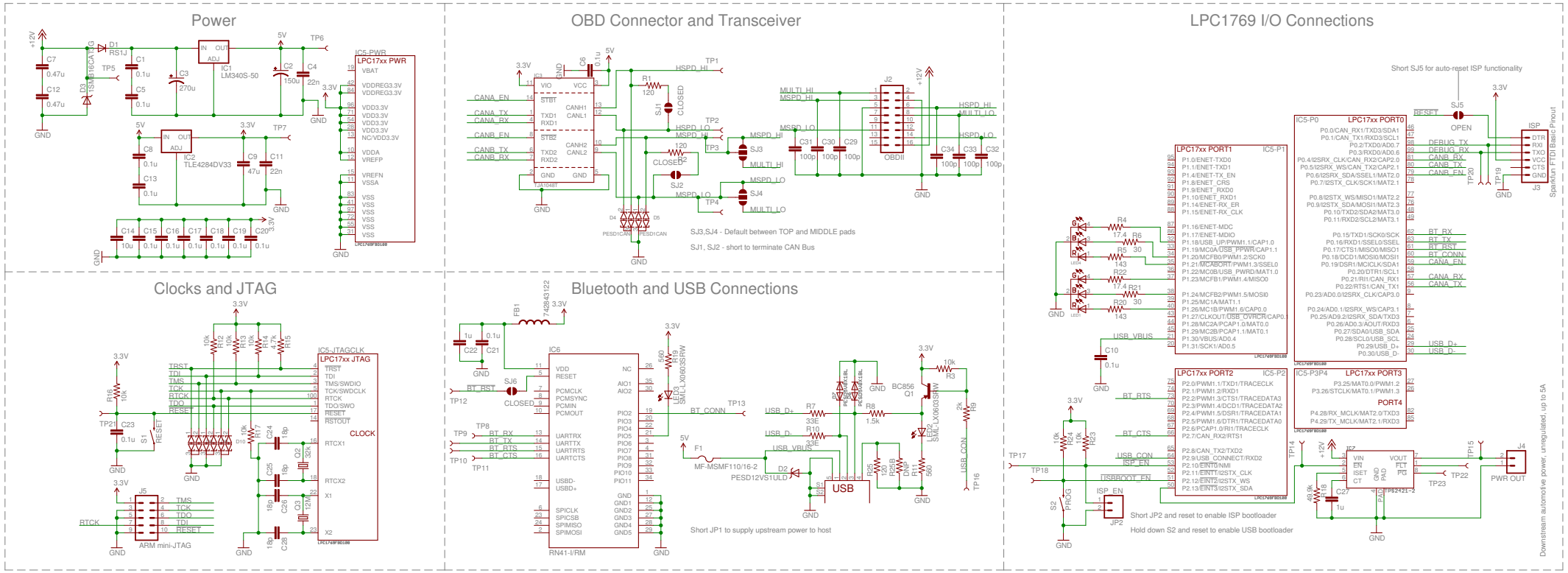
Power
OBD Connector and Transceiver
LPC1769 I/O Connections
Clocks and JTAG
Bluetooth and USB Connections
LPC17xx PWR
LPC17xx JTAG
LPC17xx PORT0
LPC17xx PORT1
LPC17xx PORT2
LPC17xx PORT3
PORT4
OBDII
ARM mini-JTAG
RN41-I/RM
USB
PWR OUT
Short SJ5 for auto-reset ISP functionality
Short JP2 and reset to enable ISP bootloader
Hold down S2 and reset to enable USB bootloader
Short JP1 to supply upstream power to host
SJ3,SJ4 - Default between TOP and MIDDLE pads
SJ1, SJ2 - short to terminate CAN Bus
Downstream automotive power, unregulated, up to 5A